Donelli. Top Italian Scientists Journal, 2024;1(2)
https://doi.org/10.62684/KHLR6743

Top Italian Scientists Journal

Open Access | Article | Engineering

ISSN 3033-5132

# An overview on Modulated Scattering Sensors and their applications

**Massimo Donelli**[(a,b,c)]

[(a)] Department of Civil, Environmental and Mechanical Engineering (DICAM), University of Trento, Trento 38123, Italy

[(b)] Center for Security and Crime Sciences, University of Trento and Verona, Italy

[(c)] Radiomic Laboratory, Department of Economy and Management (DEM)University of Trento, Italy

**Correspondence to:** Massimo Donelli, massimo.donelli@unitn.it

**Published:** 1 Mar 2024

## Abstract

Modulated scattering sensors are based on the scattering properties of small antennas. They operate similarly to radio frequency identifier RFIDs but they don't require a radio front-end, and with respect to RFIDs, which are characterized by a limited operative range, MST sensors can theoretically reach any distance up to kilometres. The information is carried on by modulating an impinging/interrogating electromagnetic wave by properly change the load impedance of the antenna sensor, with suitable resistive loads and electronic switches. MST sensors can also operate at microwave frequency bands thanks to the introduction of suitable MEMs switches able to operate up to 100 GHz, moreover they are simple, low invasive and very cheap. In this work the evolution and some recent advancements in the development and application of MST sensors at different engineering scenarios will be reported and commented.

**Keywords:** Microwave, electromagnetic propagation, modulated scattering technique, RFIDs.

# Introduction

In the last decades, the evolution of wireless technology, monolitic microwave integrated circuits (MMIC), and internet of things (IoT) has enabled the development of different compact, low cost, wireless sensors, which are capable to collect, process, and share the information related to a given physical parameter with other sensors or with a remote elaboration unit. There are a lot of practical applications, such as the measurement of environmental parameters in inaccessible, dangerous or restricted areas [1], rescue operations [2] and homeland security [3]. Radio frequency identification (RFID) is a well knows [4,5], low invasive and cheap technology that has been successfully adopted to measure environmental parameters [6]. Humidity [7], temperature [8], material moisture estimation, are some examples of such practical applications [9]. Unfortunately, RFIDs require a close proximity between the reader and tags because they work thanks to inductive coupling, and therefore they are not suitable for monitoring parameters located far away from the reader. Some attempts to improve the range of RFIDs systems have been done [10,11,12] with success. However, the transmitted power required by such still remains quite high, with respect to a standard RFID system. Another interesting solution to improve the distance between reader and tags is the development of UWB tags [11,12,13,14,15]. These sensors combine the capabilities of RFID tags and wireless device, they are able to acquire, post process and transmitting the data to other wireless devices. This integration can extend the range of standard basic RFID system, the problem is that they require the presence of an expensive RF front end such as a radio modem, Zigbee or WiFi modules [16]. In such a framework, modulated scattering technique (MST) sensors [17] offer an attractive alternative solution for all scenarios that require a very low electromagnetic pollution and dimensions, high flexibility, low cost, and long life duration without maintenance.

Moreover, another interesting advantage of MST sensors are their capability to operate at high distance. Theoretically MST sensors can work at any distance up to kilometers, the pioneering work presented in [18,19] demonstrated the possibility of using an MST system to transmit video surveillance with a few watts at the reader up to 10 kilometers. The main

advantage of MST probes is that they are not physically connected with the measurement system, they make use of the scattering properties of small passive antennas [20,21]. The MST probe antenna is loaded with different impedances by means of an electronic switch to introduce a low frequency modulation signal in the impinging electromagnetic wave generated by the reader, which also detects the backscattered field and retrieves information from the low frequency modulation signal. Thanks to this MST probes do not require complex radio frequency front end or high power supply to work properly, this strongly simplify the design of such sensors and make them cheap and low invasive. Another very significant advantage of the MST technology is its insensitivity to both far and near propagation effects when compared to other wireless based sensors and their capability to be easily integrated with existing RFID measurement systems with limited hardware modifications. Recently MST probes modulated scattering technique (MST) tags demonstrated their capabilities and potentialities in different areas of practical engineering applications, thanks to their low dimensions, they are particularly suitable for measurements that require a small probe to reduce perturbations and noise in the measurement [22] such as microwave imaging applications [23,24], near field electromagnetic measurements [25], material characterization [26], for through-the-wall applications in [27], as long-range RFID tags [28], for the remote inspection of the structural integrity of civil engineering buildings [29], as environmental sensor for the assessment of air quality [30] and in many IoT systems [31] for sensing applications. Thanks to their compactness, versatility and capability to operate at microwave frequency bands and high distances, MST tags demonstrated to be a good alternative to RFID and chip-less RFIDs [32,33] tags. As stated above the main drawbacks of MST sensors are the low efficiency of the electronic switch, especially at high frequencies. The main responsible of the power consumption is the electronic PIN diode switches commonly used in MST tags. In [34] some guidelines for the maximization of MST systems operative range, and suggestions to limit the switch limitations are proposed, while in [35] a broadband MST tag equipped with a self-complementary antenna is proposed. In [36] exotic materials such as graphene have been used to overcome the limitation of electronic switches to operate at high microwave frequency bands [37]. Recently thanks to the recent evolution of new electro mechanical switches called RF-MEMs [38,39], it is now possible to operate at very high frequency as the attempts reported in [40,41]. This work tries

to give an overview on the potentialities and applications of MST systems and it is organized as follows: Section 2 introduces the mathematical formulation related to the MST systems and describes in details the structure of MST readers and tags. Section 3 is devoted to the description of different MST systems applications. Finally, section 4 provides the concluding remarks.

## Mathematical Formulation and system description

MST systems are composed of reader and a set of tags, as standard RFID systems. Figure 1 reports the structure of two MST system configurations, monostatic and bistatic. The reader of monostatic version, is equipped with only one antenna which acts both as transmitter and receiver thanks to a circulator. In bistatic version the transmitting and receiving sections are separated and two antennas must be used. The monostatic version is preferred when reader compactness is required, but the circulator presence introduce noise on received data. The bistatic version is preferred when the noise level must be reduced. The reader generates an electromagnetic wave which impinges on MST tag and it is reflected back. This backscattered electromagnetic wave contains the information provided by the tag thanks to an amplitude modulation created with an antenna impedance change. The MST tag is usually placed at a distance **d** from the reader called "communication range".

Different contributions are received at the reader output [42] as reported by the following relation:

$$P_{reader} = P_{inc}S_{11} + S_{scatt} + S_{probe} + N \tag{1}$$

where $P_{inc}$ is electromagnetic incoming wave power from the reader generator, $S_{11}$ is the return loss of antenna reader which takes into account mismatches. $S_{scatt}$ is the contribution due to the presence of different scatterers belonging the scenario under measurement since a no-free space scenario is assumed, **N** is a noise contribution due to the multi-path reflection between the reader and MST tag.

The only useful contribution that must be isolated is the term $S_{probe}$, because it carries the modulation provided by the tag and it could be easily isolated from other contributions. $S_{probe}$ is given by the following:

$$S_{probe} = S_{struct} + S_{mod} = S_{struct} + P_{inc} Z_T \frac{1}{Z_{tag} + Z_L}$$

(2)

where $Z_T$ is a term which take into accounts the coupling between reader and tag, it is called transfer impedance, which accounts the coupling between reader and tag antennas [43]. The transfer impedance is given by $Z_T=(V^{oc})^2/2P_{inc}$ where $V^{oc}$ is the open circuit voltage measured at antenna tag output, $Z_{tag}$ is the impedance of antenna tag, and $Z_L$ is the MST load impedance. The term $S_{struct}$ can be neglected as reported in [43] since it has limited effects on the antenna port. An amplitude modulation is introduced in the backscattered wave thanks to a modification of $Z_L$ value [34,44].

The modulation presence permits to isolate $S_{mod}$ from the structural term and the other unmodulated terms reported in (2).

The maximum distance at which the reader can retrieve information from the tag depends on: the power of interrogating electromagnetic wave, efficiency of electronic switch and values of the resistive loads [6,34,42], *d* can be easily estimated considering the following well-known radar equation:

$$d = \frac{1}{2}\left[\frac{\lambda^2 \cdot G_{tx} \cdot P_{tx} \cdot G_{tag} \cdot A_{tag} \cdot ME}{4\pi \cdot P_{rx}}\right]$$

(3)

where λ is the wavelength of the interrogating electromagnetic wave, $P_{tx}$ is the power of the transmitter, $P_{rx}$ is the minimum detectable power at the reader section. $G_{tx}$ is the transmitting antenna gain, $G_{tag}$ and $A_{tag}$ are the antenna tag gain and aperture cross-section respectively. ME is the so-called modulation efficiency provided by the following relation [25]:

$$ME = \frac{1}{2}\left[\frac{4 \cdot Re\{Z_{tag}\}^2 \cdot |Z_2 - Z_1|^2}{|Z_{tag} - Z_1|^2 \cdot |Z_{tag} - Z_2|^2}\right]$$

(4)

where $Z_{tag}$ is the antenna tag impedance, $Z_1$ and $Z_2$ are the two resistive loads connected by means of the electronic switch as indicated in Figure 1. The modulation efficiency ME can

range between 0 and 4, and it only depends on $Z_{tag}$, $Z_1$ and $Z_2$. Normally, $Z_1$ is set as short and $Z_2$ as absorbing load, in order to get a perfect match and they are set respectively equal to 0 and $Z_{tag}$*. Considering (1), it is quite evident that the only way to improve the communication range, given $P_{tx}$, $G_{tx}$, and $P_{rx}$, is to modify the values of the two loads $Z_1$ and $Z_2$, or to act on the tag antenna impedance $Z_{tag}$, with the other parameters of the system fixed. The loads $Z_1$ and $Z_2$ are easy to choose because $Z_1$=0 and $Z_2$=Re{$Z_{tag}$}*. In addition, they could be strongly dependent on the considered switching technique. The tag antenna design provides more degrees of freedom to obtain a suitable ME. In particular, the way to maximize the tag performance and to increase the communication range is to maximize the modulation efficiency ME versus the $Z_{tag}$. In particular, the following equations, well described in [42], permit to obtain the real and imaginary values of the antenna impedance that maximize the ME:

$$R_{opt} = \sqrt{R_1 \cdot R_2 \cdot \left(1 + \frac{X_1 + X_2}{R_1 + R_2}\right)^2} \tag{5}$$

$$X_{opt} = -\frac{R_1 \cdot X_2 + R_2 \cdot X_1}{R_1 + R_2} \tag{6}$$

where $R_1$, $R_2$, and $X_1$, $X_2$, are the real and the imaginary part of the impedance loads $Z_1$ and $Z_2$, respectively, $R_{OPT}$ and $X_{OPT}$ are the optimum values of the real and imaginary part of the antenna tag impedance that maximize the ME [42].

The above formulation is very useful to obtain the maximum communication range and it works for MST characterized by two loads $Z_1$=$R_1$, $Z_2$=$R_2$ and a 1S2T switch as reported in Fig. 2 (a). Let us now consider a tag equipped with three different loads $Z_1$=$R_1$, $Z_2$=$R_2$, $Z_3$=$R_3$, and an1S3T electronic switch as reported in Fig. 2 (b). With this configuration it is possible to retrieve the dielectric permittivity of the media which surround the MST antenna tag and obtaining a sensor able to characterize material as in [29,45].

More in detail when a modulation is introduced to obtain different impedance values for $Z_L$, the term $Z_{mod}$ can be isolated by measuring the signal difference $P_{reader}$ for different $Z_L$ values, in order to define a differential reflection coefficient, that can be easily measured at the reader output [45] and it is given by:

$$\Delta\Gamma_T = \eta_{tag} \cdot \frac{Z_{tag} - Z_L^{(1)}}{\left(Z_{tag} + Z_L^{(1)}\right) \cdot \left(Z_{tag} + Z_L^{(2)}\right)} \tag{7}$$

where $\eta_{back}$ is the surrounding media impedance, which impacts also on MST tag antenna impedance $Z_{tag}$. It is worth noticing that $Z_{tag}$, $\eta_{back}$, and $Z_L^i$ , i=1, 2 can be isolated by changing the impedance states at least three times and solving the following system of equations [45].

$$\begin{bmatrix} 1 & Z_L^{(1)} & -\Gamma_{tag}^{(1)} \\ 1 & Z_L^{(2)} & -\Gamma_{tag}^{(2)} \\ 1 & Z_L^{(3)} & -\Gamma_{tag}^{(3)} \end{bmatrix} = \begin{bmatrix} \eta_{back} + \Gamma_{tag} Z_{tag} \\ \Gamma_{und} \\ Z_{tag} \end{bmatrix} = \begin{bmatrix} \Gamma_{tag}^{(1)} Z_L^{(1)} \\ \Gamma_{tag}^{(2)} Z_L^{(2)} \\ \Gamma_{tag}^{(3)} Z_L^{(3)} \end{bmatrix} \tag{8}$$

where $\Gamma_{und}$ is given by:

$$\Gamma_{und} = S_{11} + \frac{S_{scatt} + S_{struct}}{P_{inc}} \tag{9}$$

The objective is to isolate the term $\eta_{back}$ from the $Z_{tag}$ by inverting the system matrix (8).

The solution of (8), is the value of $Z_{tag}$ will lead to the following relation:

$$Z_{tag} = \frac{\Delta Z_L^{3,2} Z_L^1 \Gamma_{tag}^1 + \Delta Z_L^{1,3} Z_L^2 \Gamma_{tag}^2 + \Delta Z_L^{2,1} Z_L^3 \Gamma_{tag}^3}{\Delta Z_L^{3,2} Z_L^1 \Gamma_{tag}^1 + \Delta Z_L^{1,3} \Gamma_{tag}^2 + \Delta Z_L^{2,1} \Gamma_{tag}^3} \tag{10}$$

where $\Delta Z_L^{i,j} = \left(Z_L^{(i)} - Z_L^{(j)}\right)$ j,i=1,2,3, $\Gamma_{tag}^i$, i=1,2,3; can be easily measured at the reader output, $Z_L^i$, i=1,2,3; are known quantities. In particular, to reach this goal a proper choice of

the three loads $Z_L^i$, i=1,2,3; is required. The guidelines for their selection are reported in [45], and the best choice is when the distance between each load is the same.

Considering that the input impedance of the antenna tag is influenced by the variations of dielectric characteristics of the neighbor regions. In particular the changes of $\eta_{back}$ affect the reflection coefficient of the MST tag antenna. These effects can be easily measured and used in order to characterize the material. In particular, under the hypothesis of an antenna embedded in a homogeneous surrounding environment characterized by a dielectric constant $\varepsilon_r^{(0)}$ modifies its input impedance according to the following relation [45]:

$$Z_{tag}\left(f, \varepsilon_s^{(0)}\right) = \sqrt{\frac{\varepsilon_r^{(0)}}{\varepsilon_r^{(S)}}} Z_{tag}\left(f, \varepsilon_s^{(S)}\right)\left(f \cdot \sqrt{\frac{\varepsilon_r^{(0)}}{\varepsilon_r^{(S)}}}, \varepsilon_s^{(0)}\right) \tag{11}$$

where f is the working frequency, $\varepsilon_r^{(0)}$ and $\varepsilon_r^{(S)}$ are the relative dielectric constant of the medium which surround the antenna. Consequently, antenna's input impedance is sensitive to the variations of surrounding media. Once obtained $Z_{tag}$ from the system of equations (8) and considering relation (11) the value of $\varepsilon_r^{(S)}$ can be retrieved.

## MST system description

In this subsection, an accurate description of MST system will be reported. First of all monostatic and bistatic reader structure and the considered transmission protocol are described. Then a description of the two MST tags used is reported.

## Reader Description and related Communication Protocol

Let us start considering the monostatic reader structure. It consists of a microwave generator, a homodyne receiver, and a circulator, mandatory for the monostatic version of the system, which permits to use only one high gain antenna as transmitter and receiver at the same time. The reader structure is reported in the left side of Fig. 1. As it can be noticed the circulator output (port 3) is directly connected to the homodyne receiver. The circulator usually enhance the noise level, and in all the applications where noise level must be keep at low level it is preferred the use of a bistatic reader configuration as shown in right side of Fig. 1. As it can

be noticed the bistatic configuration makes use of two antennas. The transmitting antenna is connected with the microwave signal generator and provides the interrogating electromagnetic wave. The receiving antenna is directly connected with the homodyne receiver (which has the same structure of the monostsatic version). It is worth noticing that in this configuration the local oscillator of the coherent receiver must be properly synchronized with the microwave generator in order to keep the information related to the phase signal. Concerning the transmission data protocol used for both versions, it is the same as RFID devices. In detail, EM4102 protocol and the Manchester modulation are used. In EM4102 the data are organized as follows: the beginning of stream is represented by the first nine bits at logical state 1 and serves as a head marker sequence. Then, the following bits are organized in 10 groups of four data bits and one even parity bit. At the end in order to close (stream tail) the data, four bits of a column parity (even) and a stop bit (zero) are used. The use of EM4102 permits to keep the compatibility of MST system with all the typical facilities commonly adopted for RFID systems.

## Description of the MST tag

The typical structure of MST tags is quite simple because they do not require a radio frequency frontend and it is shown in Fig. 2 which reports a two Fig. 2 (a) and three Fig. 2 (b) loads MST tag. Both are equipped with a suitable antenna aimed at receive the incoming electromagnetic wave from the reader. The received electromagnetic power is divided by means of a 3dB splitter. Half power is provided to a rectifying subcircuit aimed to provide power supply to the electronic switch, and the elaboration unit which provides the low-frequency amplitude modulation and encode the data. The other half power is reflected back and it carries the information thanks to the amplitude modulation introduced by the electronic switch and the resistive loads. The electronic switch is commonly implemented by using PIN diodes, Mosfet transistors [34], or MEMs depending on the application.

MST tag of Fig. 2 (a) uses 1S2T switch and two different loads. It is commonly used to transfer data. While the tag of Fig. 2 (b) is able not only to transmit data but also to provide information concerning the dielectric characteristics of the surrounding media. It makes use of 1S3T switch and three different loads.

## Example of applications

In order to demonstrate the capabilities of MST tag sensors and systems, a selected set of engineering applications will be presented in this section. Let us start with the description of a long range, temperature measurement system operating in the X band microwave frequency range and proposed in [28]. The MST tag consists of an antenna array of two elements, a 3 $dB$ power divider, a rectifying circuit, a PIN diode switch and a microprocessor namely an PIC16876 microcontroller. The electromagnetic wave which impinges on the array is equally split by the power divider. Half power is send to a two-stage Chockcroft-Walton multiplier, equipped with a quarter-wavelength microstrip resonator to improve its performances at 10 GHz and aimed at provide a voltage of about 3 V and a current of about 8 μA which are mandatory to activate the microcontroller and electronic switch. One of the output ports of the power divider is connected with a TS3002 device from Touchstone Semiconductors. The antenna, splitter, and all the subsystems operating at high frequency have been fabricated on a ceramic dielectric substrate of thickness t = 0.8mm, $\varepsilon_r$= 3.8 and tan(δ)= 0.003. The obtained tag prototype is a compact multi layers structure of dimensions H=50mm, W=35mm and thickness T=3mm. The MST tag schema is reported in Fig. 3 (a). The tag performances have been assessed by placing it at a distance d=10m from a monostatic reader composed by a generator with $P_{rx}$=200 mW, an RX/TX antenna with a gain $G_{tx}$=17dBi. The prototype tag was equipped with a temperature sensor and transmits the data with the EM4102 protocol by using a low frequency modulating signal of 100 KHz to modulate the carrier at 10GHz.

The signal measured at the reader output and the prototype photo are reported in Fig. 3 (b). It can be noticed from the data reported in Fig. 3 (b) that the signal detected by the reader is very clean and stable. The next application of MST sensors is very interesting and it is related to the remote inspection of structures and materials. The system makes use of a probe equipped with three loads and able to retrieve the dielectric characteristics of the materials and it is reported in [29].

This system is composed by a monostatic reader operating in the X band with a transmitting power of $P_{TX}$ = 0 dBm, a circulator (model PE8403 by Pasternack Enterprise). As TX/RX antenna an helical radiator has been designed with a central frequency $f_0$=10GHz, characterized by the following parameters, diameter D=21 mm, turn number N=9, spacing

between the turns $D_t$=15 mm, conductor diameter $D_w$=1 mm (a copper silver plated wire has been used), and the ground plane is a metallic circular copper disc of diameter $D_b$=40 mm. The reader antenna has a gain of $G_{TX}$=12.51dBi and a main beam aperture of $\theta_{3dB}$=20 in the frequency range [9-11.5] GHz. The helical antenna was designed to produce a left hand circular polarization (LHCP). The receiving section as usual is a coherent (homodyne) detector composed by a double balanced mixer (model PE86X10003 by Pasternack Enterprise), whose local oscillator (LO) input port is provided with a reference signal obtained by a DDS generator through an unequal T-junction power splitter.

The MST tag antenna is an array of five square patch antennas, four rectifying circuits, an electronic PIN diode switch 1S3T, and a microcontroller. The antenna array is printed on a dielectric laminate of thickness t = 0.8 mm, $\varepsilon_0$=3.38, and tan(δ)=0.001$. Each patch antenna has side length W=9.13 mm with two corners removed in order to assure a circular polarization. All the patch antennas have been designed to resonate at $f_c$=10 GHz. All the structure is embedded in a circular disk of diameter $D_{TAG}$ = 40 mm. In order to prevent short circuit due to the possible presence of high content water in the materials under test, the has been protected with a thin insulating layer of dielectric paint. Only the central patch placed is devoted to modulate the impinging electromagnetic wave and to retransmit information toward the reader and it is connected to the input port of a 1S3T pin diode switch, whereas the switch output ports are connected with three loads chosen following the guidelines reported in [45], and with values $Z_a$=0.0+j50.0 [Ω], $Z_b$=0.0+j0.0 [Ω], and $Z_c$=50.0+j0.0 [Ω]. Four square patches, placed all around the central antenna are devoted to convert the power of impinging electromagnetic into power supply for the microcontroller and electronic switch. The tag working procedure can be summarized as follows.

The tag schema is reported in Fig. 4 (a). When an impinging electromagnetic wave reach the four rectennas, the microcontroller turn on. The 1S4T switch is activated, ant it change the tag antenna loads with three different combinations of loads every 100 nS. The tag can be easily embedded into different materials, such as concrete, in order to evaluate their integrity.

The schema, and photo of the reader and tag prototypes are reported in Fig. 4 (b) and (c) respectively. In order to assess the capabilities of MST tag, it was buried in a block of size

0.25×0.25×0.25 $ $m^3$ of concrete and placed at r=0.5 m. As it can be noticed the tag response, reported in Fig. 5 is quite clear and stable for all the three load combinations.

An MST tag has been buried inside a foundation concrete block of dimensions 0.50×0.25× 0.25 $m^3$. The objective is to monitor the dry level of the concrete and at the same time to identify its quality. The block, have been monitored for 48 hours and the response of MST tag has been collected and elaborated to retrieve both the dry level and the material dielectric constant. The distance between sample block and reader has been set to d=0.5 m. For the sake of correctness the dielectric constant of the concrete has been previously measured by using reflectometric technique, both wet and dry conditions have been considered to obtain the real truth. In particular a wet foundation concrete presents a dielectric constant of $\varepsilon_{found}^{wet} = 20 \pm 1.5$ and $\varepsilon_{found}^{dry} = 10 \pm 1.5$. The results are reported in Fig. 6. As it can be noticed from the monitor of concrete drying process the block reached a satisfactory dry level after about 20 hours and this is a very important indication for the safety fabrication of civil engineering structures.

# Conclusions

A summary of modulated scattering technique systems and their practical applications has been presented in this work. MST systems demonstrated their capabilities to operate at high-frequency bands and at long distances. To demonstrate the potentialities of such systems, a selected set of practical engineering applications have been presented. Moreover, different references related to a wide range of applications have been reported. The obtained results demonstrated the capabilities and potentialities of MST systems as valid alternative to standard wireless sensors. The obtained preliminary results are very promising and demonstrated the capabilities of this compact on-chip MST tag as a valid alternative to standard RFIDs, wireless sensor networks WSNs, and IoT systems.

# Declarations

## Conflict of Interest

The Author declares that there is no conflict of interest.

## Funding

The authors have no funding sources to report.

## Author Contributions

**MD:** Conceptualization, Investigation, Methodology, Data Collection, Data Analysis, Writing – Review & Editing.

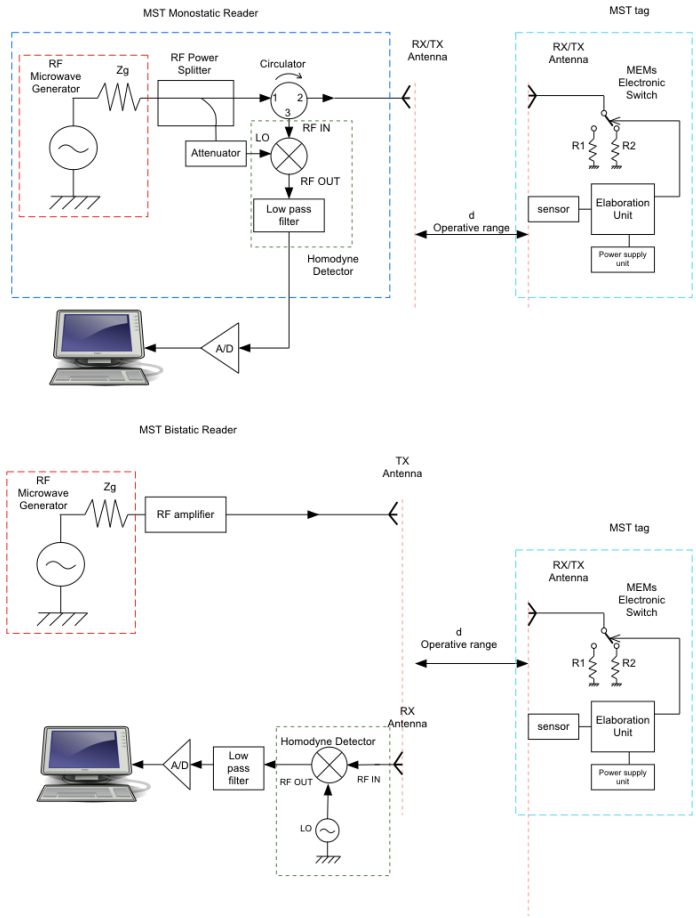


**Figure 1.** Schema of monostatic and bistatic MST systems.

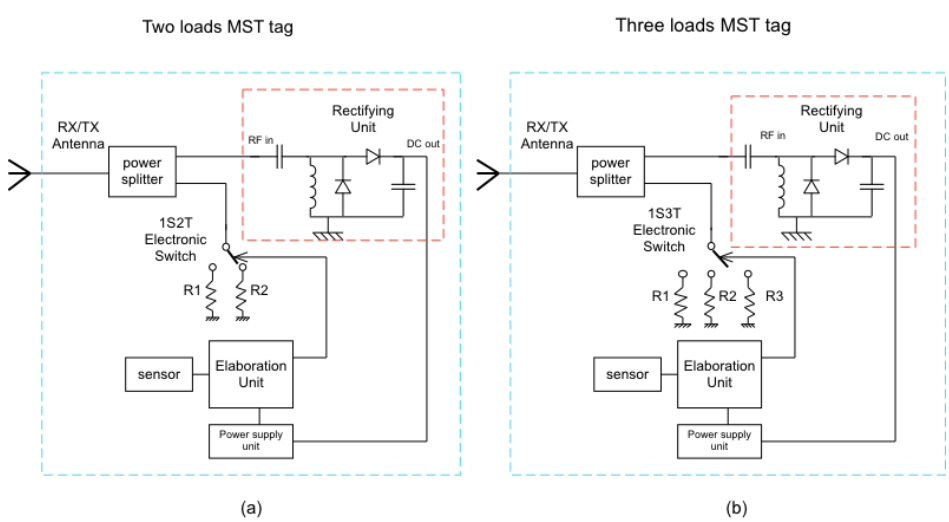


**Figure 2.** MST tag structure: (a) two loads and (b) three loads for moisture detection.

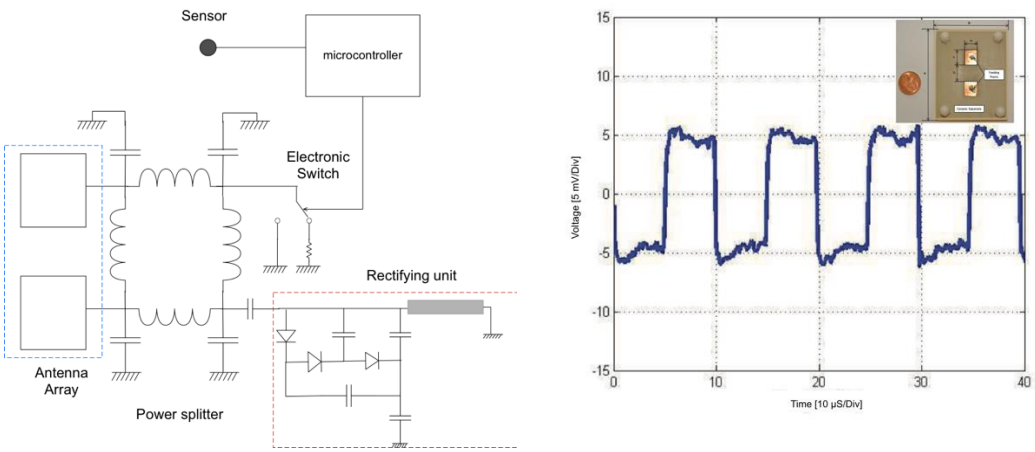


(a) (b)

**Figure 3.** RF-MEMs switch. Measurement of the reflection coefficient $|S_{11}|$ (a) and insertion loss $|S_{21}|$ (b) vs frequency.

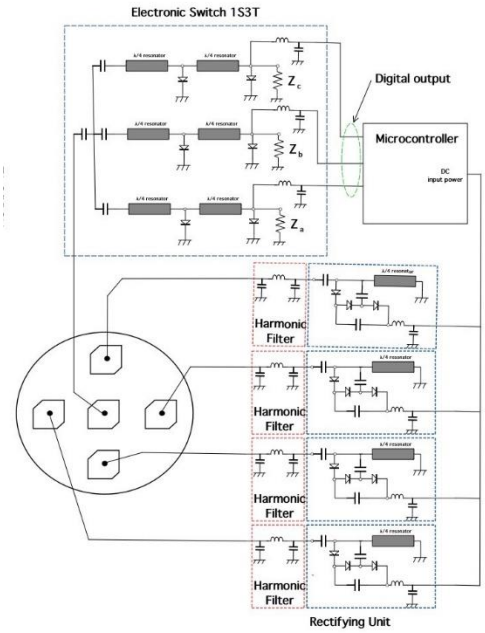


(a)

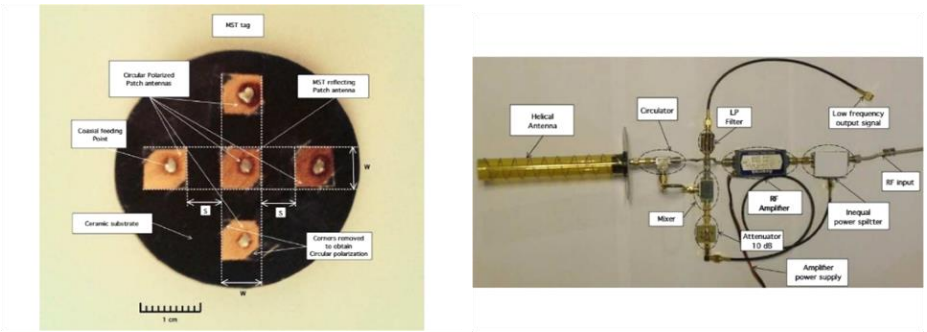


(b) (c)

**Figure 4.** MST tag schema (a) and photo (b), monostatic reader photo (c).

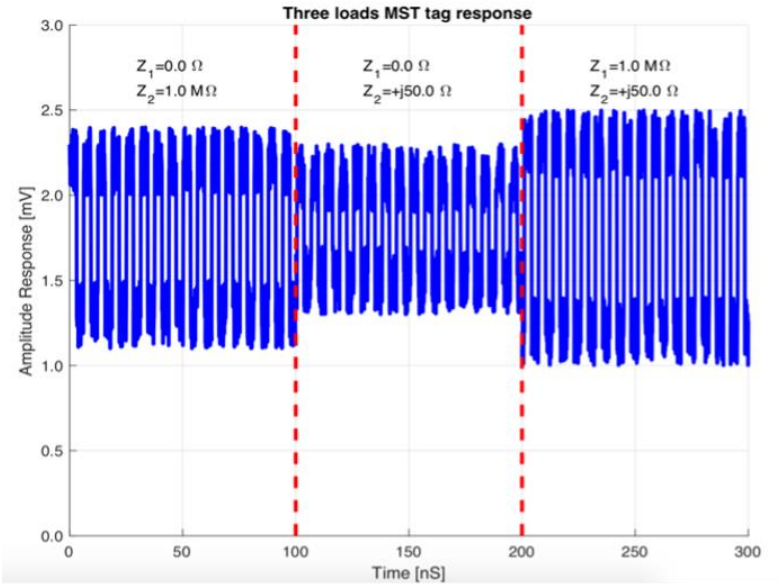

**Figure 5.** Tag response measured at the reader output for the three loads combinations.

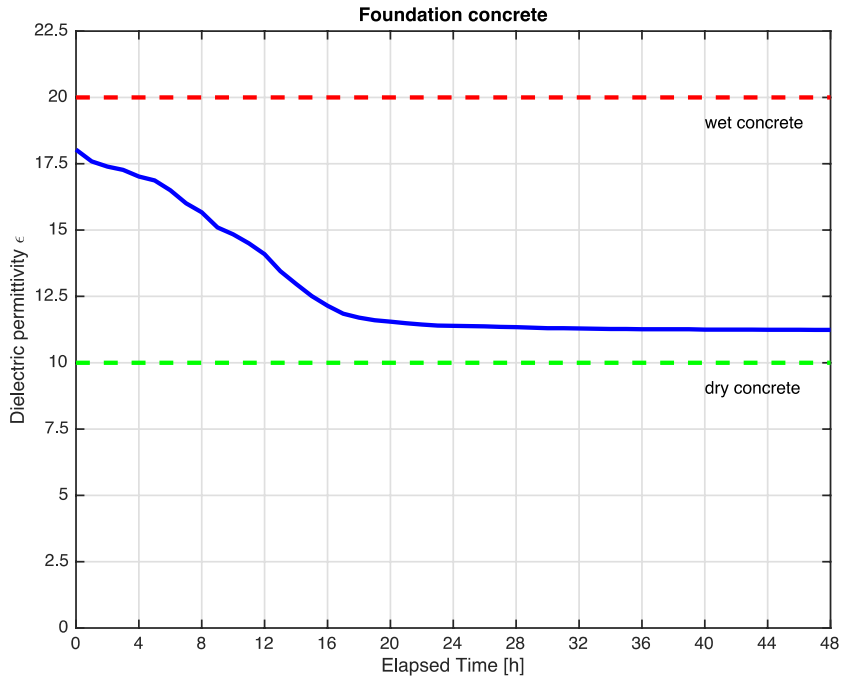


**Figure 6.** Dry level monitoring of a foundation concrete block.

# References

1. L. Shu, Y. Chen, Z. Sun, F. Tong and M. Mukherjee, "Detecting the Dangerous Area of Toxic Gases with Wireless Sensor Networks," in IEEE Transactions on Emerging Topics in Computing, vol. 8, no. 1, pp. 137-147, 1 Jan.-March 2020, doi: 10.1109/TETC.2017.2700358.
2. A. Girma et al., "IoT-enabled autonomous system collaboration for disaster-area management," in IEEE/CAA Journal of Automatica Sinica, vol. 7, no. 5, pp. 1249-1262, September 2020, doi: 10.1109/JAS.2020.1003291.
3. Y. Ismail, M. Hammad and W. El-Medany, "Homeland Security Video Surveillance System for Smart Cities," 2018 International Conference on Innovation and Intelligence for Informatics, Computing, and Technologies (3ICT), Sakhier, Bahrain, 2018, pp. 1-4, doi: 10.1109/3ICT.2018.8855732.
4. A. Mostaccio, G. M. Bianco, G. Marrocco and C. Occhiuzzi, "RFID Technology for Food Industry 4.0: A Review of Solutions and Applications," in IEEE Journal of

Radio Frequency Identification, vol. 7, pp. 145-157, 2023, doi: 10.1109/JRFID.2023.3278722.

5. Z. Ye, M. Yang, Y. Ren, C. -H. J. Hung, C. -T. M. Wu and P. -Y. Chen, "Review on Recent Advances and Applications of Passive Harmonic RFID Systems," in IEEE Journal of Radio Frequency Identification, vol. 7, pp. 118-133, 2023, doi: 10.1109/JRFID.2023.3276310.
6. S. Capdevila, L. Jofre, J. Romeu, and J. C. Bolomey, "Passive RFID based sensing," in Proc. IEEE Int. Conf. RFID-Technol. Appl., Sep. 2011, pp. 507–512.
7. D. Masi et al., "Radio-pill: RFID miniaturized and battery-free humidity probe for pharmaceutical moisture analysis," 2022 IEEE 12th International Conference on RFID Technology and Applications (RFID-TA), Cagliari, Italy, 2022, pp. 153-156, doi: 10.1109/RFID-TA54958.2022.9924046.
8. S. Rima, A. Georgiadis, A. Collado, R. Goncalves and N. Carvalho, "Passive UHF RFID enabled temperature sensor tag on cork substrate," 2014 IEEE RFID Technology and Applications Conference (RFID-TA), Tampere, Finland, 2014, pp. 82-85, doi: 10.1109/RFID-TA.2014.6934205.
9. V. Mulloni and M. Donelli, "Chipless RFID Sensors for the Internet of Things: Challenges and Opportunities," Sensors, vol. 20, no. 7, p. 2135, Apr. 2020, doi: 10.3390/s20072135.
10. E. Nilsson, B. Nilsson, L. Bengtsson, B. Svensson, P. -A. Wiberg and U. Bilstrup, "A low power-long range active RFID-system consisting of active RFID backscatter transponders," 2010 IEEE International Conference on RFID-Technology and Applications, Guangzhou, China, 2010, pp. 26-30, doi: 10.1109/RFID-TA.2010.5529854.
11. J.~P.~Curty, N.~Joehl, C.~Dehollain, and M.~J.~Declercq, "Remotely powered addressable UHF RFID integrated system," IEEE Journal Solid-State Circuits, vol. 40, no. 11, pp. 2193--2201, Nov. 2005.
12. F.~Fuschini, C.~Piersanti, F.~Paoloazzi, and G.~Falciasecca, "On the efficiency of load modulation in RFID systems operating in real enviroment," IEEE Antennas and Propagat. Letters, vol. 7, pp. 243--246, 2008.

13. S. Sharma, M. R. Tripathy and A. K. Sharma, "FSS supported longer read range passive UHF RFID reader antenna," 2021 IEEE International Conference on RFID Technology and Applications (RFID-TA), Delhi, India, 2021, pp. 207-210, doi: 10.1109/RFID-TA53372.2021.9617417.
14. D.~M.~Dobkin, The RF in RFID: Passive UHF RFID in Practice, Elsevier, 2006.
15. G.~Shaker, S.~Naeini, N.~Sangary, and M.~M.~Tentzeris, ``Inkjet printing of ultrawideband (UWB) antennas on paper based substrates," IEEE Antennas Wireless Propag. Letters, vol. 10, pp. 111--114, 2011.
16. F.~Viani, G.~Oliveri, P.~Rocca, M.~Donelli, A.~Massa, and L.~Lizzi, ``WSN-based solutions for security and surveillance," European Microwave Week 2010, EuMW2010: Connecting the World, pp. 285--288, 2010.
17. J. C. Bolomey and G. Gardiol, Engineering Applications of the Modulated Scattering Technique. Norwood, MA, USA: Artech House, 2001.
18. R.~Bracht, E. K.~Miller, and T.~Kuckertz, ”Using an impedance-modulated reflector for passive communication IEEE Antennas and Propagation International Symposium, 13--18 July 1997, pp. 1070--1073, 1997.
19. R.~Bracht, E. K.~Miller, and T.~Kuckertz, ”An impedance modulated reflector system,” IEEE Potentials, vol. 18, no. 4, pp. 29--33, Nov. 1999.
20. R.~Harrington, ``Electromagnetic scattering by antennas, IEEE Trans. Antennas Propag., no. 1, vol. 5, pp. 595--596, Sep. 1963.
21. M.~A.~Abou-Khousa and R.~Zoughi, ``Multiple loaded scatterer method for E-field mapping applications," IEEE Trans. Antennas Propag., vol. 58, pp. 900--907, 2010.
22. H.~M.~Tehran, J.~Laurin, and R.~Kashyap, ``Optically modulated probe for precision near-field measurements," IEEE Trans. Instrumentation Measurement, vol. 59, no. 10, pp. 2755--2762, Oct. 2010.
23. S. Caorsi, M. Donelli, and M. Pastorino, “A passive antenna system for data acquisition in scattering applications,” Antennas Wireless. Propag. Lett., vol. 1, pp. 203–206, 2002, doi: 10.1109/LAWP.2002.807958.
24. M.~Ostradahimi, P.~Mojabi, S.~Noghanian, L.~Shafai, S.~Pistorius, and J.~Lovetri, ``A novel tomography system based on the scattering probe technique," IEEE Trans. Instrumentation Measurement, vol. 62, no. 2, pp. 379--390, Feb. 2012.

25. J.~C. Bolomey, S.~Capdevila, L.~Jofre, and S.~Tedjini, ``Sensitivity analysis for wireless dielectric reflectometry with modulated scatterers" Proc. 15th Int. Symp. Antenna Technol. Appl. Electromagn. Can. Radio Sci. Meeting ANTEM/URSI, pp. 1--4, 2011.
26. W. Liang, G. Hygate, J. F. Nye, D. G. Gentle, and R. J. Cook, "A probe for making near-field measurements with minimal disturbance: The optically modulated scatterer," IEEE Trans. Antennas Propag., vol. 1, no. 5, pp. 772–780, May 1997.
27. M. Donelli and D. Franceschini, "Experiments With a Modulated Scattering System for Through-Wall Identification," Antennas Wirel. Propag. Lett., vol. 9, pp. 20–23, 2010, doi: 10.1109/LAWP.2010.2041026.
28. M. Donelli, "Design of long-range, powerless RFID sensor at 10 GHz," Electron. lett., vol. 49, no. 20, pp. 1277–1278, Sep. 2013, doi: 10.1049/el.2013.2303.
29. M. Donelli and F. Viani, "Remote Inspection of the Structural Integrity of Engineering Structures and Materials With Passive MST Probes," IEEE Trans. Geosci. Remote Sensing, vol. 55, no. 12, pp. 6756–6766, Dec. 2017, doi: 10.1109/TGRS.2017.2734042.
30. M. Manekiya and M. Donelli, "An Air Quality Monitoring System with Enhanced Coverage Capabilities by Using the Modulated Scattering Technique (MST)," in 2019 PhotonIcs & Electromagnetics Research Symposium - Spring (PIERS-Spring), Rome, Italy: IEEE, Jun. 2019, pp. 2235–2240. doi: 10.1109/PIERS-Spring46901.2019.9017440.
31. M. Manekiya, M. Donelli, V. Mulloni and G. Marchi, "Integration of Modulated Scattering Technique (MST) tags with IoT devices," 2022 Microwave Mediterranean Symposium (MMS), Pizzo Calabro, Italy, 2022, pp. 1-5, doi: 10.1109/MMS55062.2022.9825565.
32. M. Manekiya, M. Donelli, A. Kumar, and S. Menon, "A Novel Detection Technique for a Chipless RFID System Using Quantile Regression," Electronics, vol. 7, no. 12, p. 409, Dec. 2018, doi: 10.3390/electronics7120409.
33. Aiswarya S, Sreedevi K. Menon, Massimo Donelli, "Development of Enhanced Range, High Q, Passive, Chipless RFID Tags for Continuous Monitoring and Sensing Applications", Electronics, vol.11, no.1, pp.127, 2021.

34. M. Donelli, “Guidelines for the Design and Optimization of Wireless Sensors Based on the Modulated Scattering Technique,” IEEE Trans. Instrum. Meas., vol. 63, no. 7, pp. 1824–1833, Jul. 2014, doi: 10.1109/TIM.2013.2297813.
35. M. Donelli, “A broadband modulated scattering technique (MST) probe based on a self complementary antenna,” in 2017 IEEE-APS Topical Conference on Antennas and Propagation in Wireless Communications (APWC), Verona, Italy: IEEE, Sep. 2017, pp. 25–28. doi: 10.1109/APWC.2017.8062231.
36. M. Donelli and F. Viani, "Graphene-Based Antenna for the Design of Modulated Scattering Technique (MST) Wireless Sensors," in IEEE Antennas and Wireless Propagation Letters, vol. 15, pp. 1561-1564, 2016, doi: 10.1109/LAWP.2016.2517041.
37. M. Donelli, “A 24GHz environmental sensor based on the modulated scattering technique (MST),” in 2014 IEEE Conference on Antenna Measurements & Applications (CAMA), Antibes Juan-les-Pins, France: IEEE, Nov. 2014, pp. 1–3. doi: 10.1109/CAMA.2014.7003306.
38. R. R. Mansour, “RF MEMS FOR SPACE APPLICATIONS,” in 2005 International Conference on MEMS, NANO and Smart Systems, Banff, AB, Canada: IEEE, 2005, pp. 191–192. doi: 10.1109/ICMENS.2005.104.
39. J. Iannacci, "RF-MEMS technology: An enabling solution in the transition from 4G-LTE to 5G mobile applications," 2017 IEEE SENSORS, Glasgow, UK, 2017, pp. 1-3, doi: 10.1109/ICSENS.2017.8234190.
40. M. Donelli and J. Iannacci, "Exploitation of RF-MEMS Switches for the Design of Broadband Modulated Scattering Technique Wireless Sensors," in IEEE Antennas and Wireless Propagation Letters, vol. 18, no. 1, pp. 44-48, Jan. 2019, doi: 10.1109/LAWP.2018.2880420.
41. M. Donelli, M. Manekiya and J. Iannacci, "Broadband MST sensor probes based on a SP3T MEMs switch," 2019 IEEE International Symposium on Antennas and Propagation and USNC-URSI Radio Science Meeting, Atlanta, GA, USA, 2019, pp. 649-650, doi: 10.1109/APUSNCURSINRSM.2019.8888839.

42. S. Capdevila, L. Jofre, J. Romeu, and J. C. Bolomey, “RFID multiprobe impedance based sensors,” IEEE Trans. Instrum. Meas., vol. 59, no. 12, pp. 3093–3101, Dec. 2010.
43. S. Capdevila, L. Jofre, J.~Romeu, and J. C. Bolomey, ``Electromagnetic modeling of RFID-modulated scattering mechanism," Proc. IEEE, vol. 98, no. 9, pp. 1555-1569, Sep. 2010.
44. J. C. Bolomey,H. M. Tehran, and J. J. Laurin, ``Optimization of optically and electrically modulated scattering probes for field measurements," IEEE Trans. Instrumentation Measurement, vol. 63, no. 1, pp. 154-165, Jan. 2014.
45. S. Capdevila, J. C. Bolomey, J. Romeu, and L. Jofre, "Antenna input impedance measurement using multi-load MST," International Workshop on Antenna Technology (IWAT), pp. 353-355, 2013. Maestripieri, D. (2012). Games Primates Play. An Undercover Investigation of the Evolution and Economics of Human Relationships. New York: Basic Books.
46. Bentley, C. G., Galliher, R. V., & Ferguson, T. J. (2007). Associations among aspects of interpersonal power and relationship functioning in adolescent romantic couples. *Sex Roles*, *57*(7-8), 483-495. https://doi.org/10.1007/s11199-007-9280-7
47. Dunbar, N. E., & Burgoon, J. K. (2005). Perceptions of power and interactional dominance in interpersonal relationships. *Journal of Social and Personal Relationships*, *22*(2), 207-233. https://doi.org/10.1177/0265407505050944